TECHNICAL DATASEET

BEF1010SD

50 hz Diesel Generator

OUTPUT POWER

Standby Power

1010 kVA

Prime Power

910 kVA

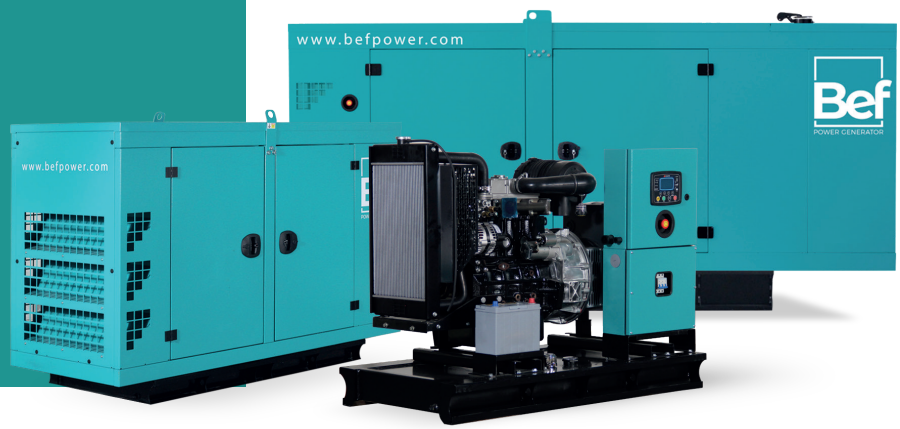

DIMENSIONS

	W x L x H (mm)	Weight	Fuel Tank Capacity
Canopied	2200X5600X2450	8475	1400
Open Skid	2200X4500X2273	6990	1400

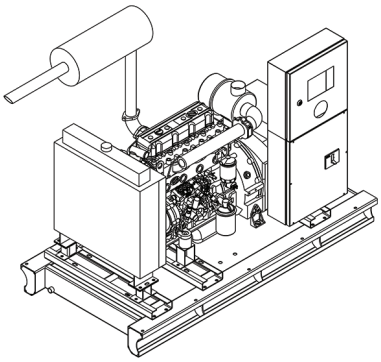

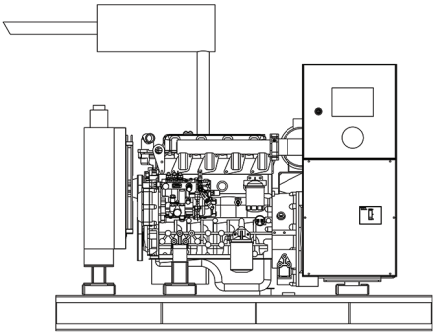

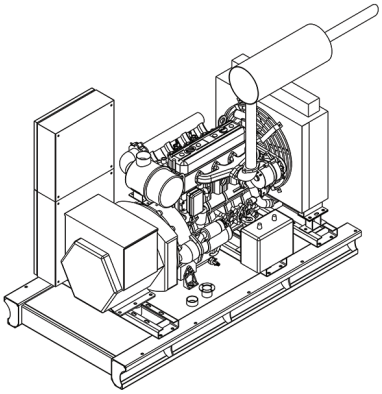

STANDBY POWER

Emergency standby power is defined as the maximum power available during a variable electrical power sequence, under the stated operating conditions, for which a generating set is capable of delivering in the event of a utily power outage or under test considions for up to 200h of operation per year with the maintenance intervals and procedures being carried out as prescribed by manufacturers. The permissible average output over 24h of operation shall not exceed 70% of the ESP unless otherwise agreed by the engine manufacturer.

With standby rated generators there is no overload capability. (ISO8528-1 : 2018)

PRIME POWER

Prime power is defined as being the maximum power which a generating set is capable of delivering continuously while supplying a variable electrical load when operated for an unlimited number of hours per year under the agreed operating conditions with the maintenance intervals and procedures being carried out as prescribed by the manufacturer. The permissible average power output, over 24 h of operation shall not exceed 70 % of the Prime power unless otherwise agreed by the RIC engine manufacturer.

Unless otherwise stated, and taking into account the site operating conditions (refer to the manufacturer data sheet), a 10 % overload power is permitted for a period of one hour with or without interruptions, within 12 hours of operation. (ISO8528-1 : 2018)

CONTINUOUS POWER

Continuous power is defined as being the maximum power which the generating set is capable of delivering continuously while supplying a constant electrical load when operated for an unlimited number of hours per year under the agreed operating conditions with the maintenance intervals and procedures being carried out as prescribed by the manufacturer. (ISO8528-1 : 2018)

TECHNICAL DATASEET

BEF1010SD

50 hz Diesel Generator

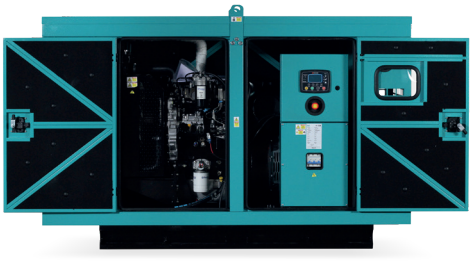

ENGINE

Engine Model		SC33W1150D2
Standby Power	*kWm*	860
Prime Power	*kWm*	782
Number of Transfers	*(r.p.m)*	1500
Cylinder Volume	*(L)*	32,8
Number of Cylinders		6 Sıralı
Broke x Stroke	*(mm x mm)*	180 X 215
Compression Ratio		15:01
Governor Type		Electronic
Ventilation System		TURBOCHARGED - AAC
Injection System		Direct
Cooling System		Water
100% Fuel Consumption at Load	*(L/h)*	194
75% Fuel Consumption at Load	*(L/h)*	146
Fuel Consumption at 50% Load	*(L/h)*	100
Total Oil Capacity	*lt.*	75
Total Cooling Capacity	*lt.*	N/A

ALTERNATOR

Number Of Phases	3
Power Factor	0,8
No of Bearings	Single
No of Poles	4
No of Leads	6-12
Insulation Class	H
Degree of Protection	IP23
Excitation System	AVR

TECHNICAL DATASEET

BEF1010SD

50 hz Diesel Generator

STANDARD EQUIPMENTS

ENGINE

BEF generator has a wide engine range. In BEF generator sets, leading engine brands that have state of the art technology and have compliance with ISO 8528, ISO 3046, BS 5514, DIN 6271 standarts, are being used. Low fuel consumption, high first step load capacity and common spare parts are the prominent features.

ALTERNATOR

In BEF generator sets, the using alternators are leading alternator brands. All alternators are pass necessary test process in mentioned IEC60034, BS4999-5000, VDE0530. There is no need bearing maintenance.

CONTROL PANEL

Standard control panel, that is used in BEF generator sets, ensures comfortable and safe usage. All measured and statistical parameters, operating modes, notice and alarms and condition of generator, are monitored easily from the control panel. On the front of the panel's metal body has electronic control module and the emergency stop button and the panel's metal body is made of steel sheet and is painted with electrostatic powder paint. The customer can monitor all fault in control panel screen.

CHASSIS AND FUEL TANK

Chassis is manufactured from steel that has features and durability for carrying burden of generator set. All chassis contain lifting lugs. All chasis design and manfacturing are done by BEF generator in our own facility. All fuel tanks are made pressure test. The customer can see fuel level on fuel tank in all BEF generators.

COOLING SYSTEM

All BEF generators are ready to work in high temperatures or low temperatures. All designs and equipment simulations are made by R&D team in BEF power.

TECHNICAL DATASEET

BEF1010SD

50 hz Diesel Generator

CANOPY FEATURES

In BEF power, all canopies are produced in BEF facility.
All canopies are modular type, canopy installation executed with screw and nut, without welding process.

The canopies are designed for easy maintenance and satisfy the customers' all need.

Emergency stop button and control panel inspection window are standart equipments in BEF power.

Depend on request, BEF power can make container type canopy.

OPTIONAL EQUIPMENTS

Some optional equipments that BEF power provides with generator sets,

- Cold climate package
  (Panel heater, alternator heater, webasto, oil heater, fuel heater etc.)
- Hot climate package
  (Tropical type radiator, industrial type air conditioning)
- Remote radiator applications
- Sycnhronisation Systems (Generator – generator, generator – mains)
- Double bearing alternators
- Air starting systems
- Pre lubrication systems
- Above ground – under ground fuel tanks
- Fuel automation systems
- Residental or critical type silencer
- PMG or AREP excitation systems
- High voltage alternators
- Seismic solutions
- Digital voltage regulator
- Protection circuit breakers
- Synchronisation panels, transfer panels (3 pole or 4 pole)
- Special painting for harsh climate

BEF POWER generator sets are produced in accordance with TSE, CE, ISO9001, ISO14001 standards.
Technical information and values are according to ISO8528, ISO3046, IEC 600341, BS 4999-5000, VDE 0530 standards.
Due to a policy continuous improvement BEF Power reserves the right to amend details and specifications without notice and all information given is subject to the BEF POWER's current condition of sales. © BEF
TBA: To Be Asked TBD: To Be Determined NA: Not Available N/A:Not Applicable

www.befpower.com I info@befpower.com